12
9
3
6
2 h

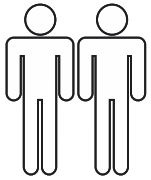

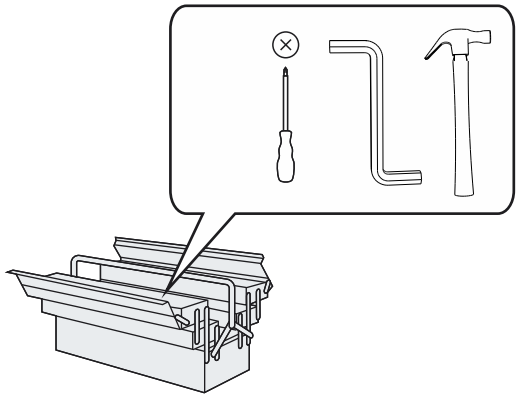

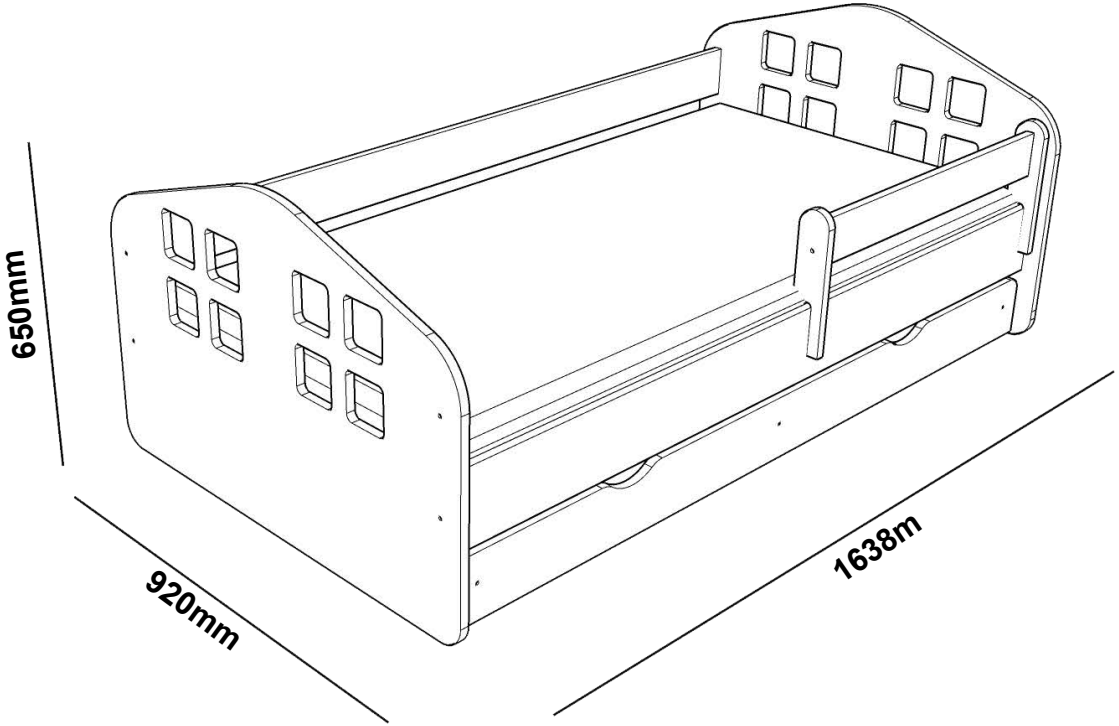
650mm
920mm
1638m

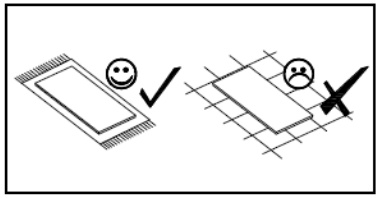

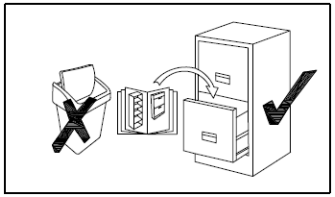

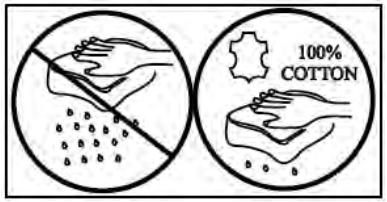
100%
COTTON

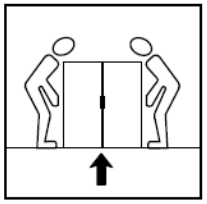

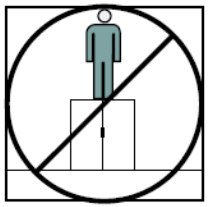

%

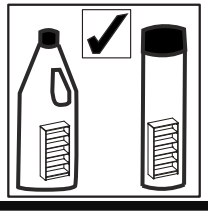

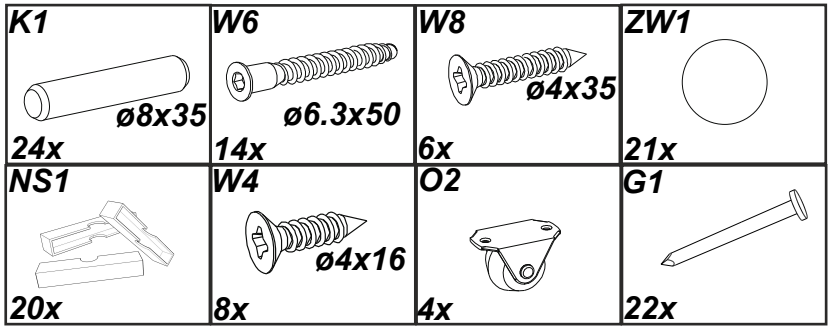

NR	DIM	QTE	PACK
1	920x650x18	1	1/2
2	920x650x18	1	1/2
3	1600x120x18	1	2/2
4	1600x120x18	1	2/2
5	1600x120x18	1	2/2
6	1600x800x20	1	1/2
7	1600x800x60-80	1	1/2
8	780x100x18	1	2/2
9	314x70x18	2	1/2
10	1580x140x18	1	2/2
11	1462x115x18	1	2/2
12	700x115x18	1	2/2
13	672x112x18	1	2/2
14	700x115x18	1	2/2
15	740x690x3	2	1/2

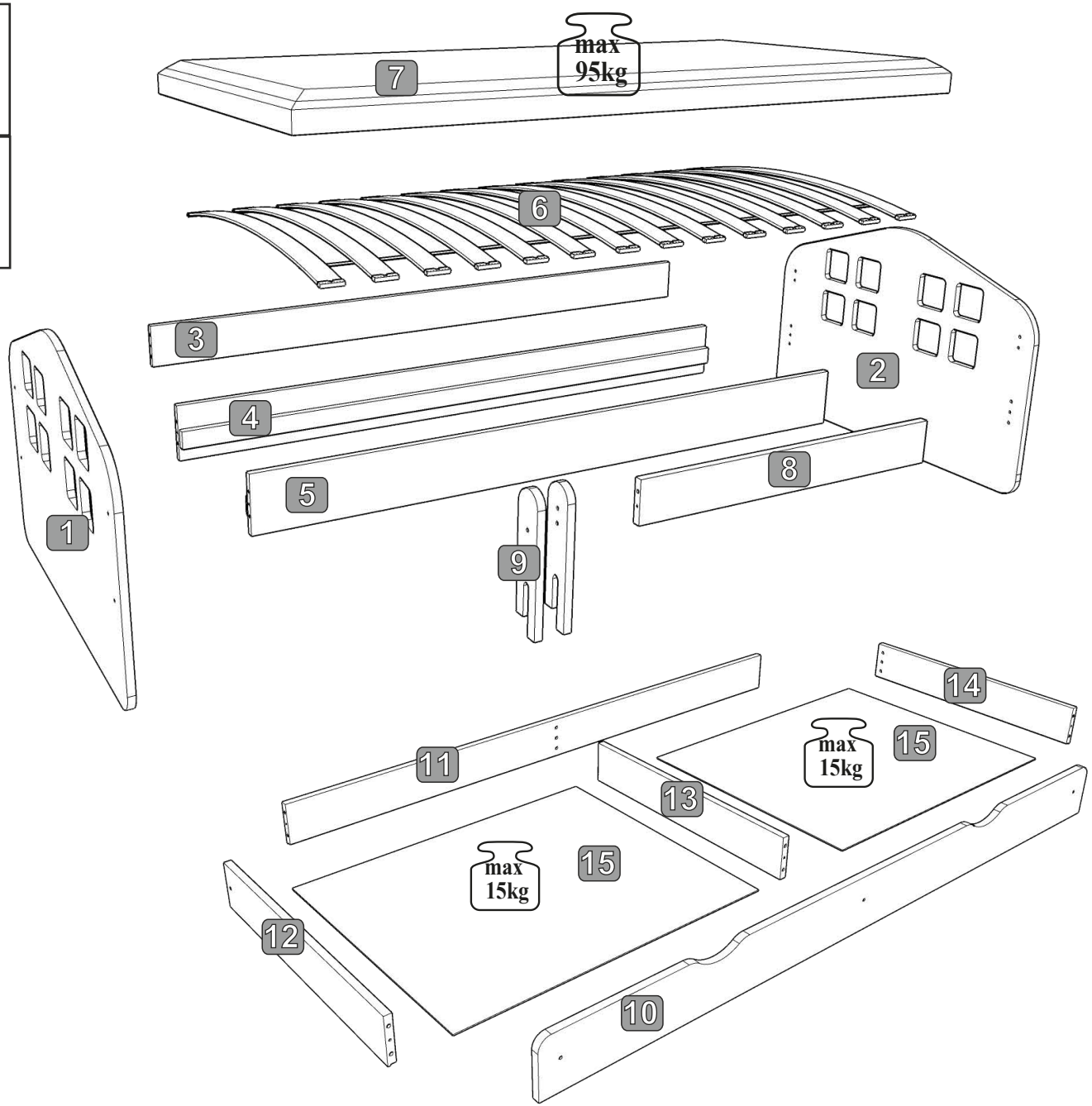

0 10 20 30 40 50 60 70 80 90 100 110 120 130 140 150 160 170 180 190 200

1

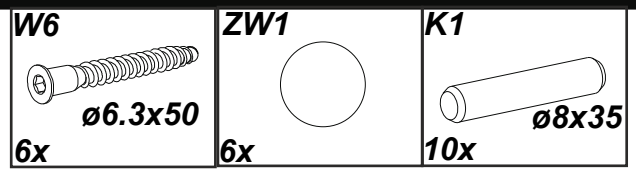
W6
ø6.3x50
6x
ZW1
6x
K1
ø8x35
10x

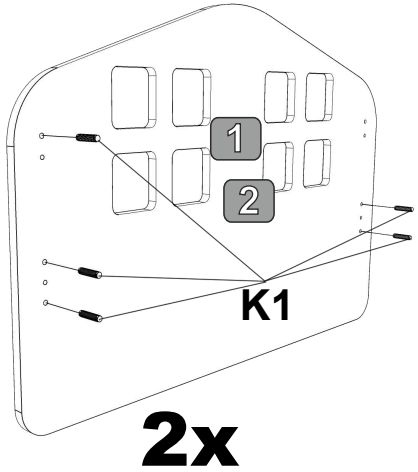
1
2
K1
2x

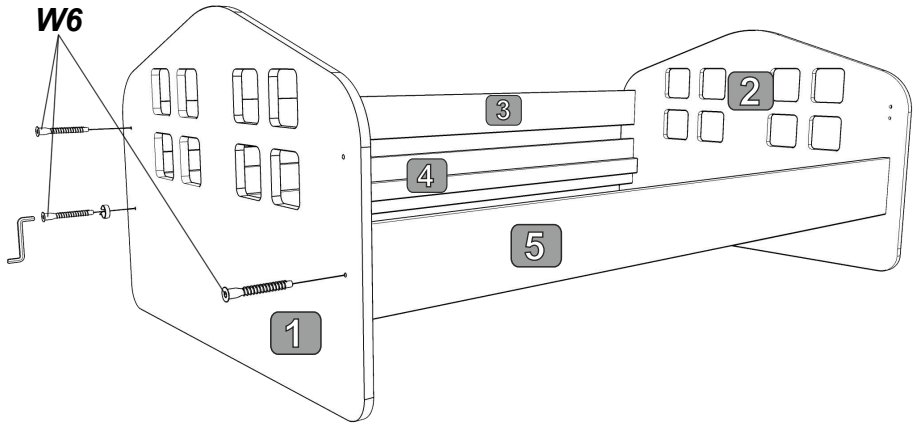
W6
3
2
4
5
1

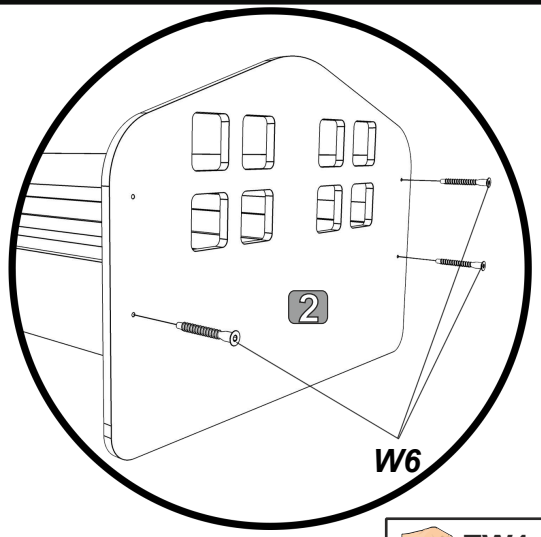
2
W6

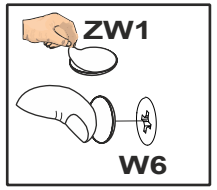
ZW1
W6

2

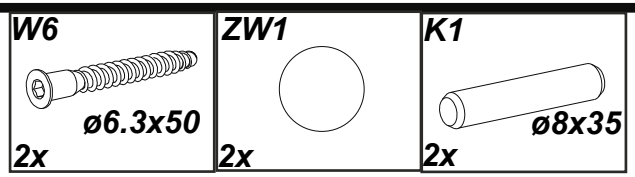
W6
ø6.3x50
2x
ZW1
2x
K1
ø8x35
2x

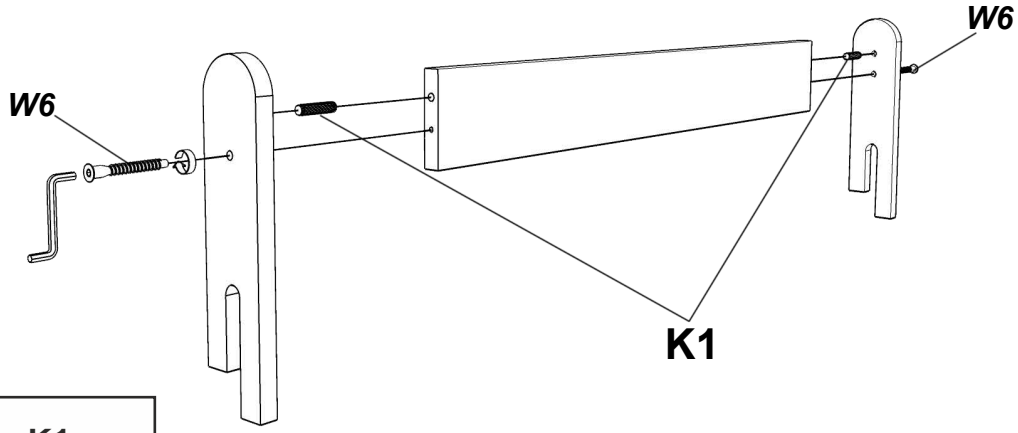
W6
W6
K1

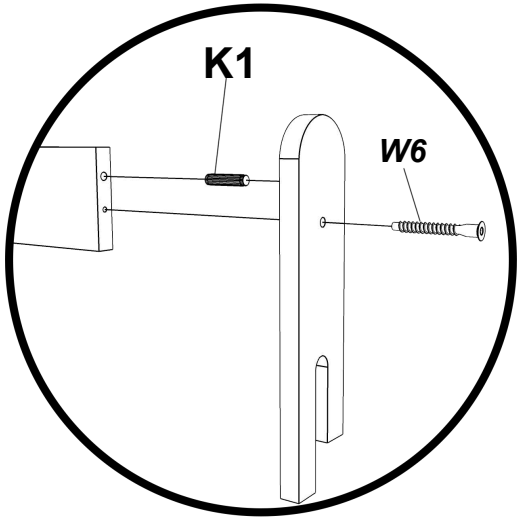
K1
W6

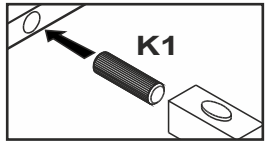
K1

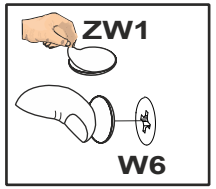
ZW1
W6

3

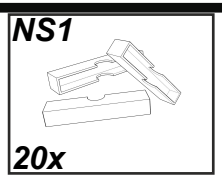

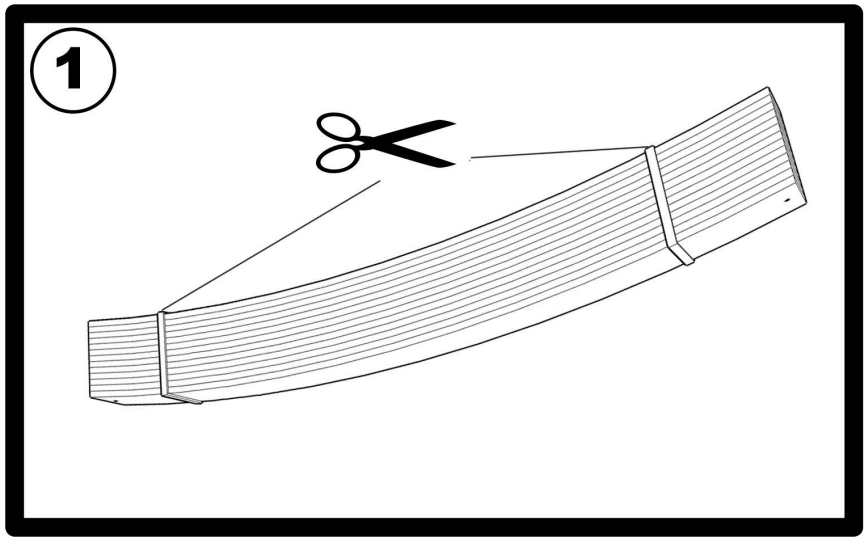

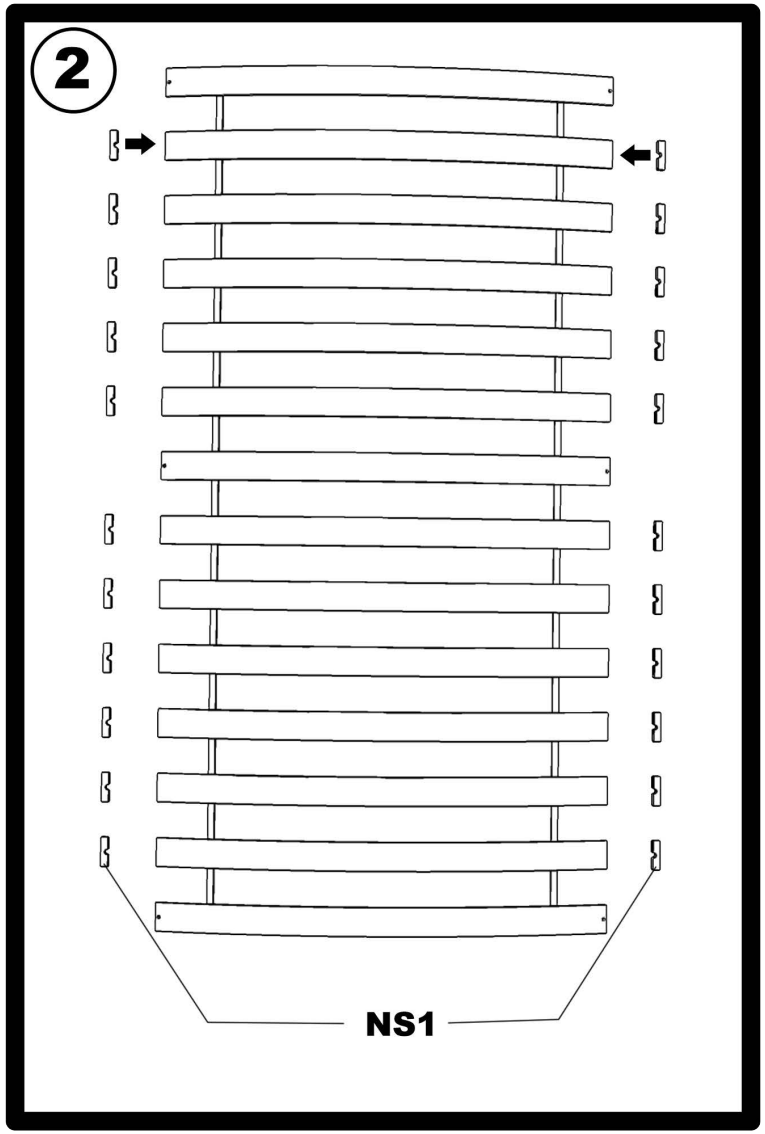

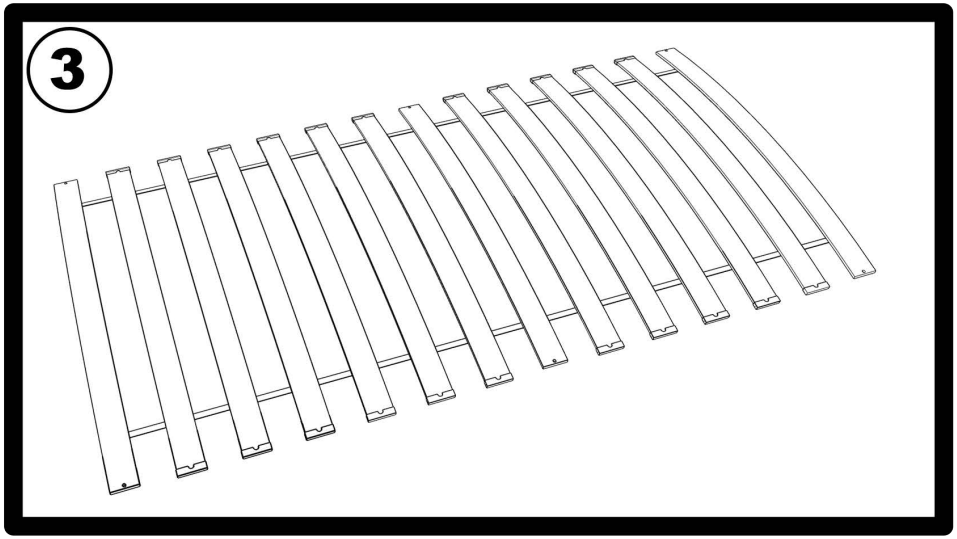

4

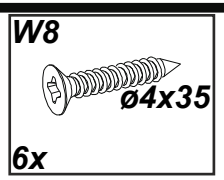

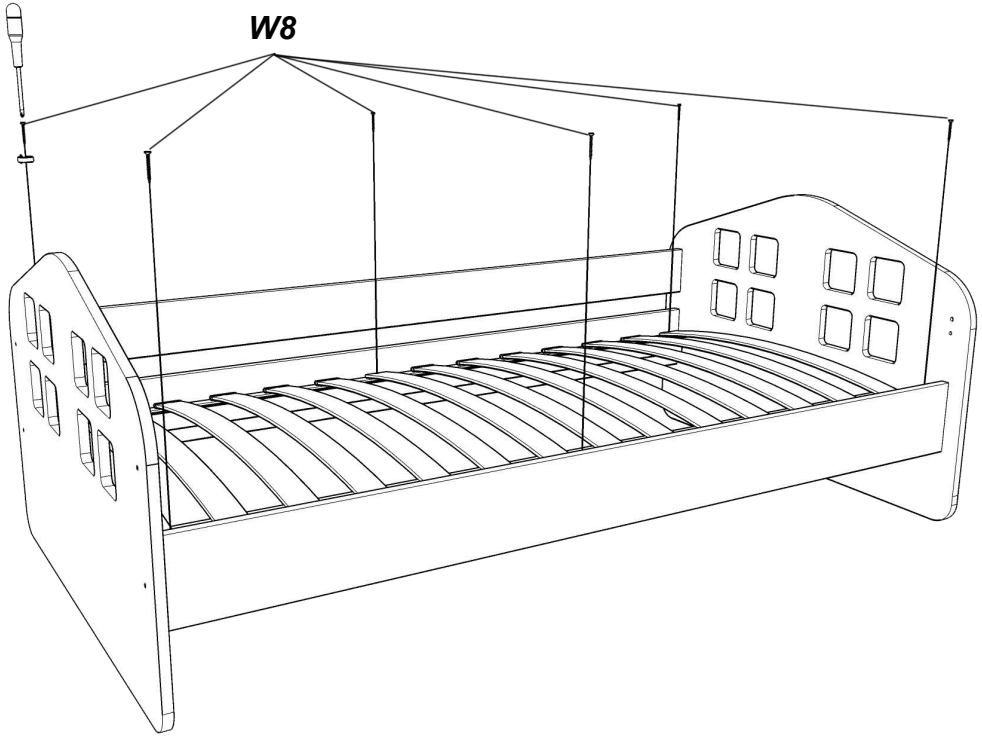

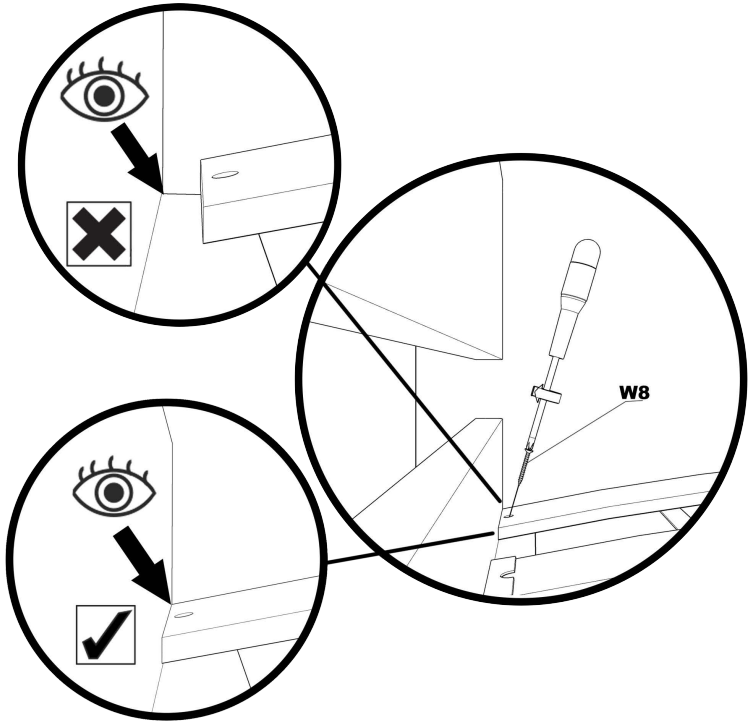

5

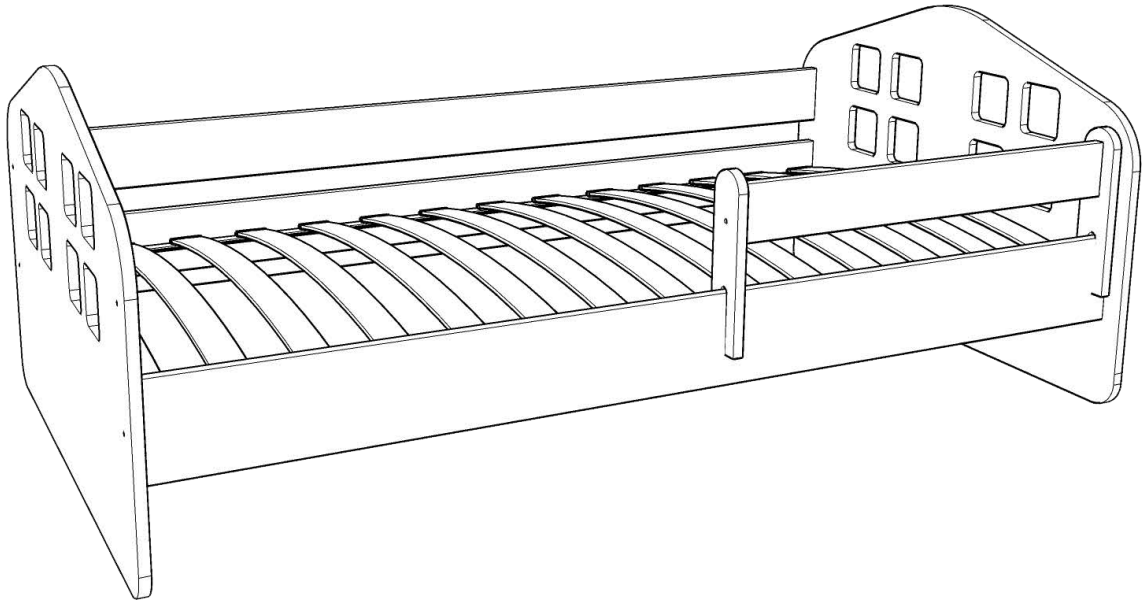

6

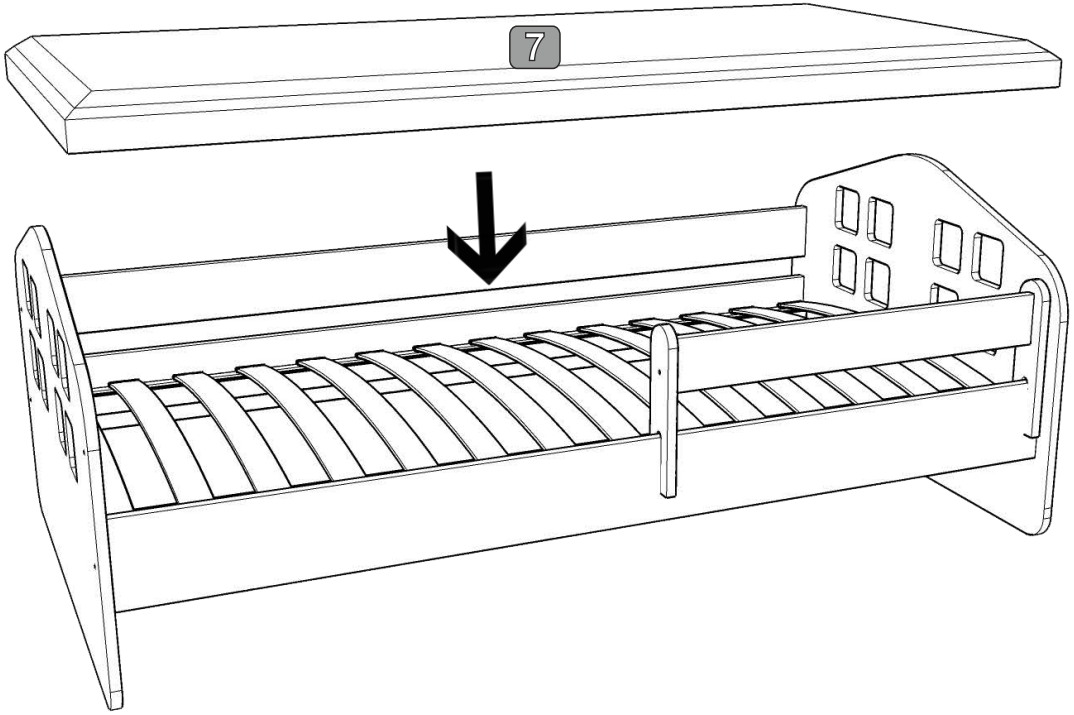

7

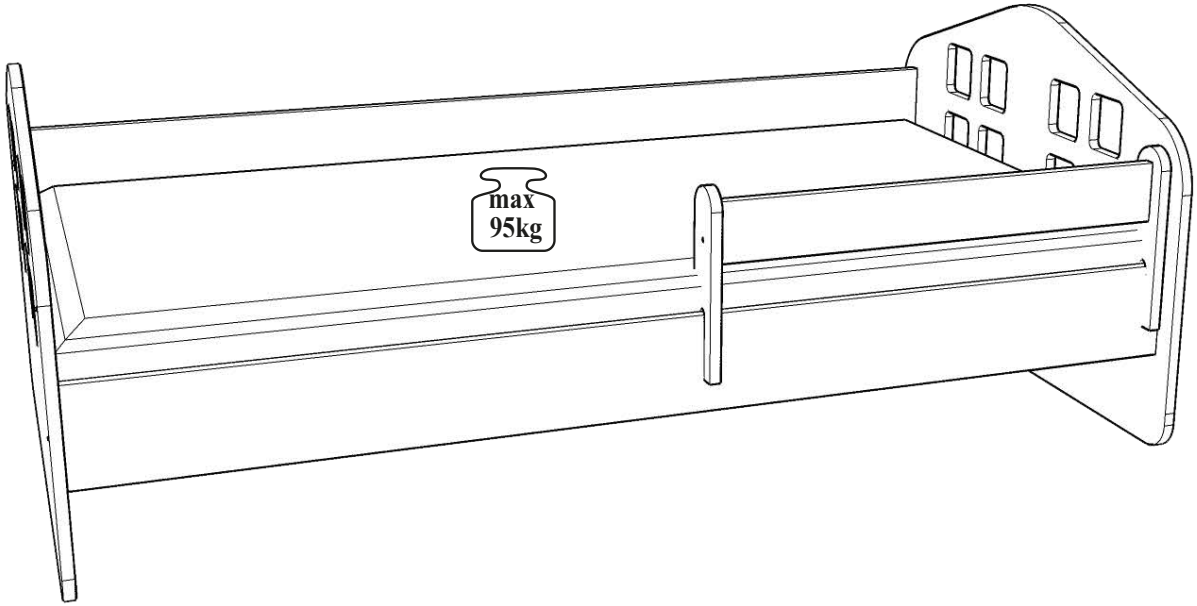

8

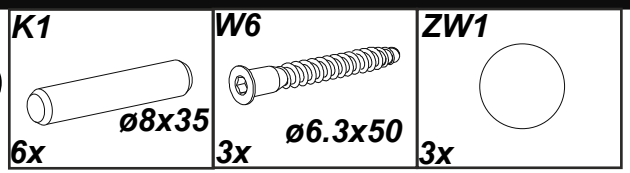
K1
ø8x35
6x
W6
ø6.3x50
3x
ZW1
3x

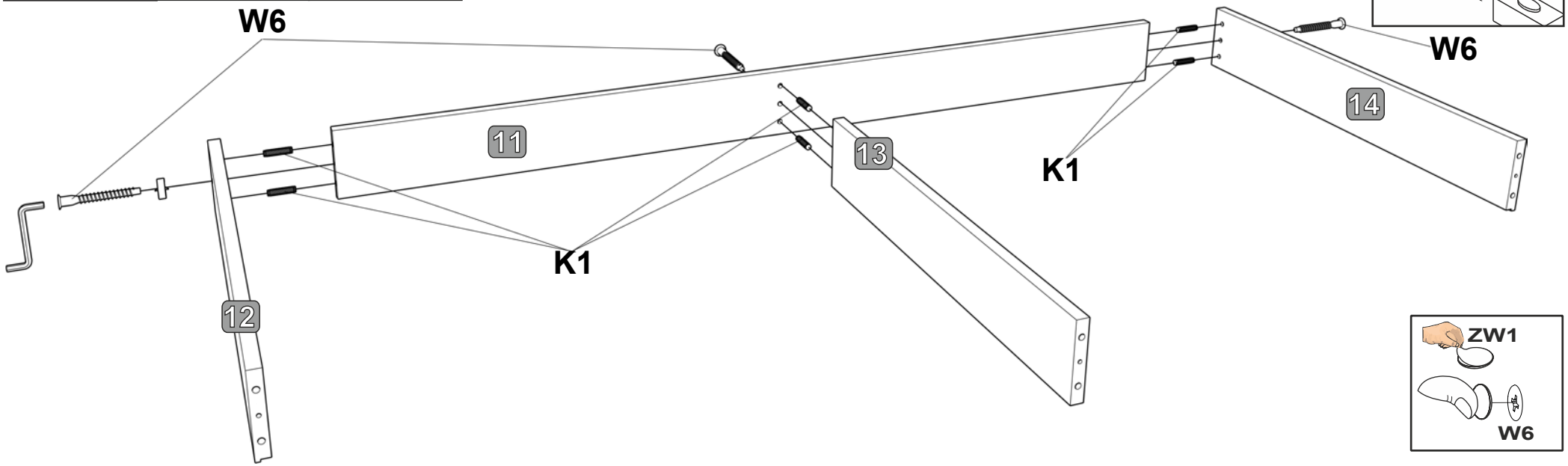
W6
11
12
13
14
K1
K1
K1
W6

ZW1
W6

9

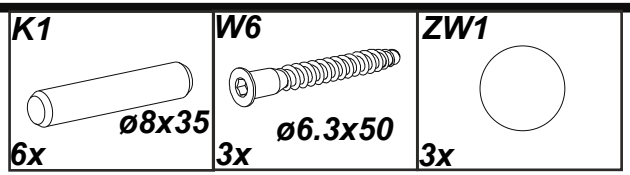
K1
ø8x35
6x
W6
ø6.3x50
3x
ZW1
3x

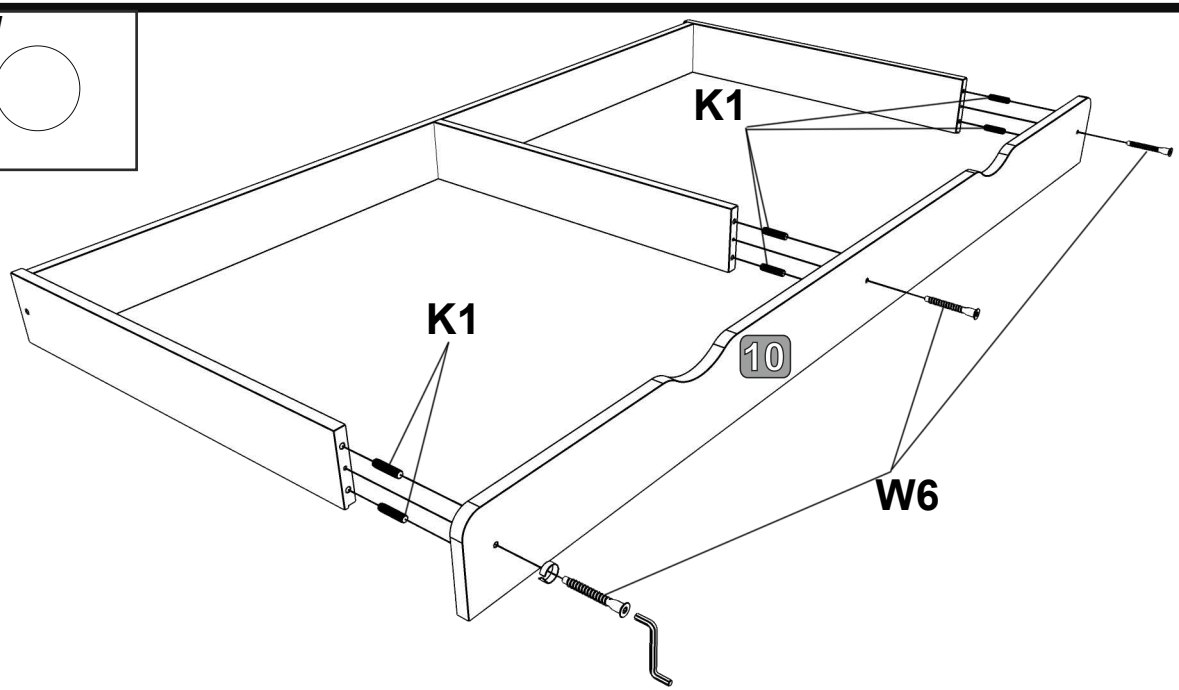
K1
K1
10
W6

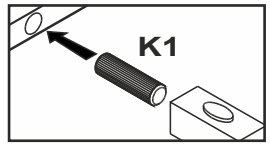
K1

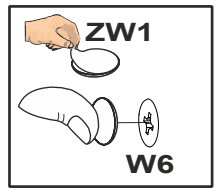
ZW1
W6

10

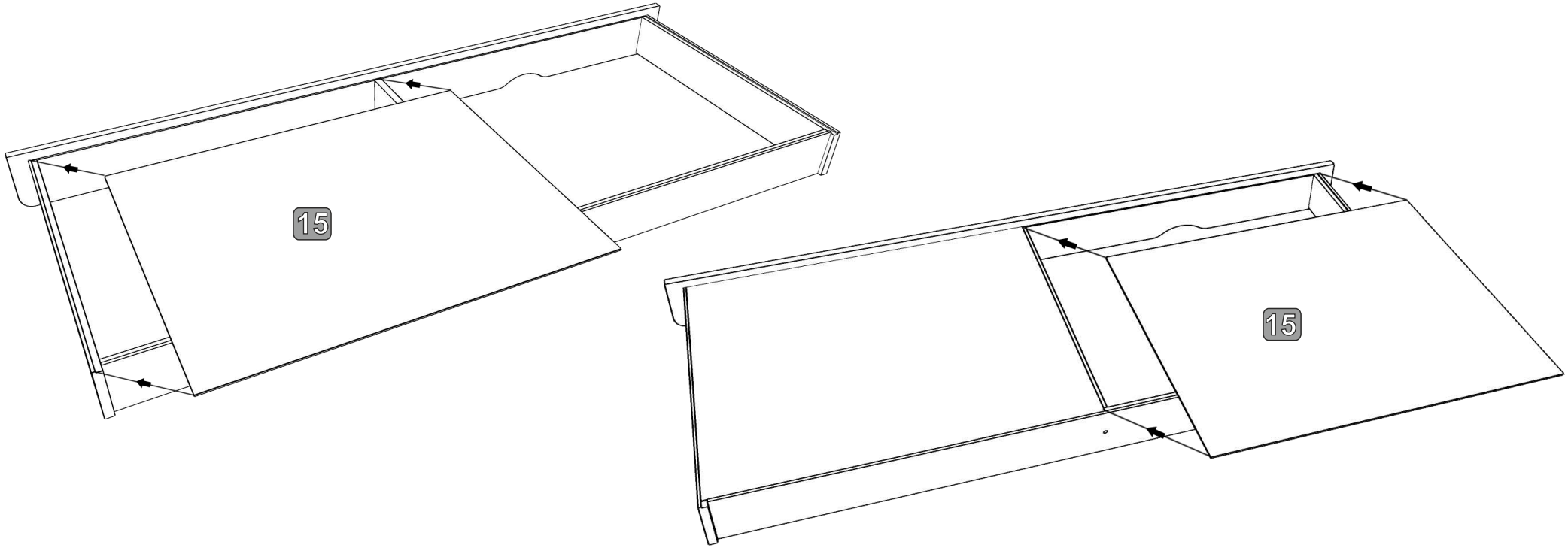

11

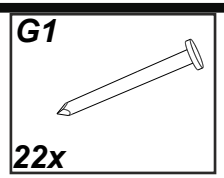

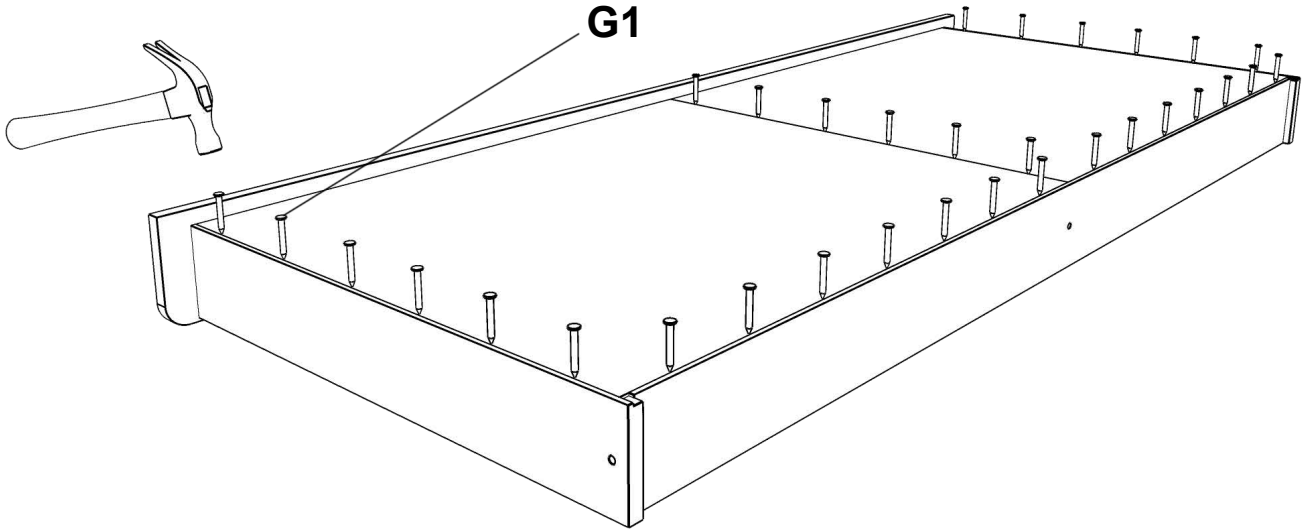

12

W4	O2
ø4x16	
8x	4x

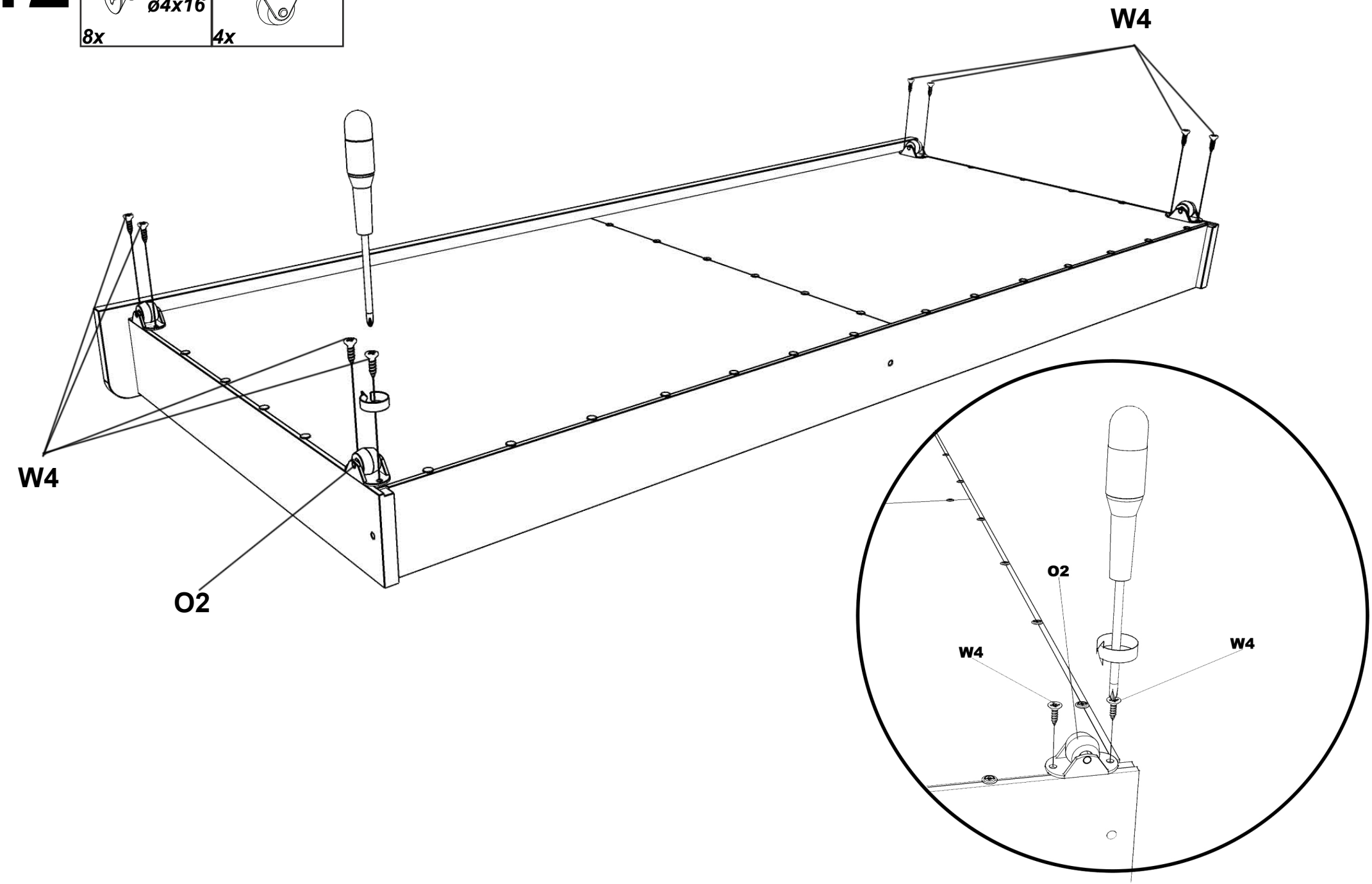
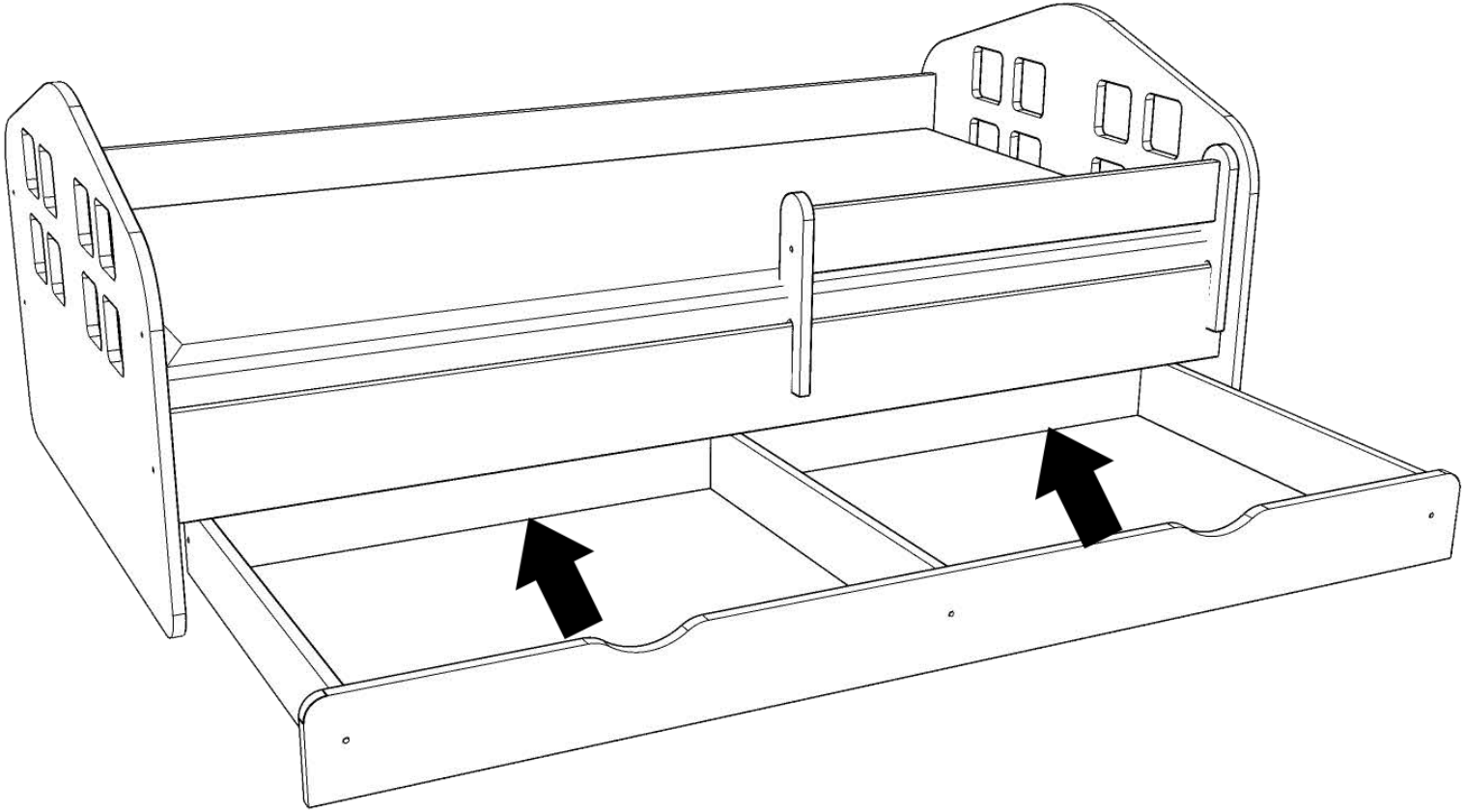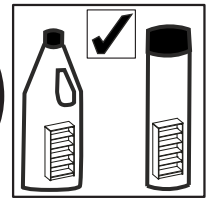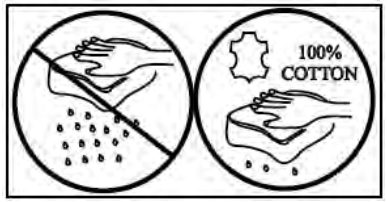
13